Replaces Toro Sand Pro 2020 Parts

Traction Unit - Model 08884 & 08887

Engine

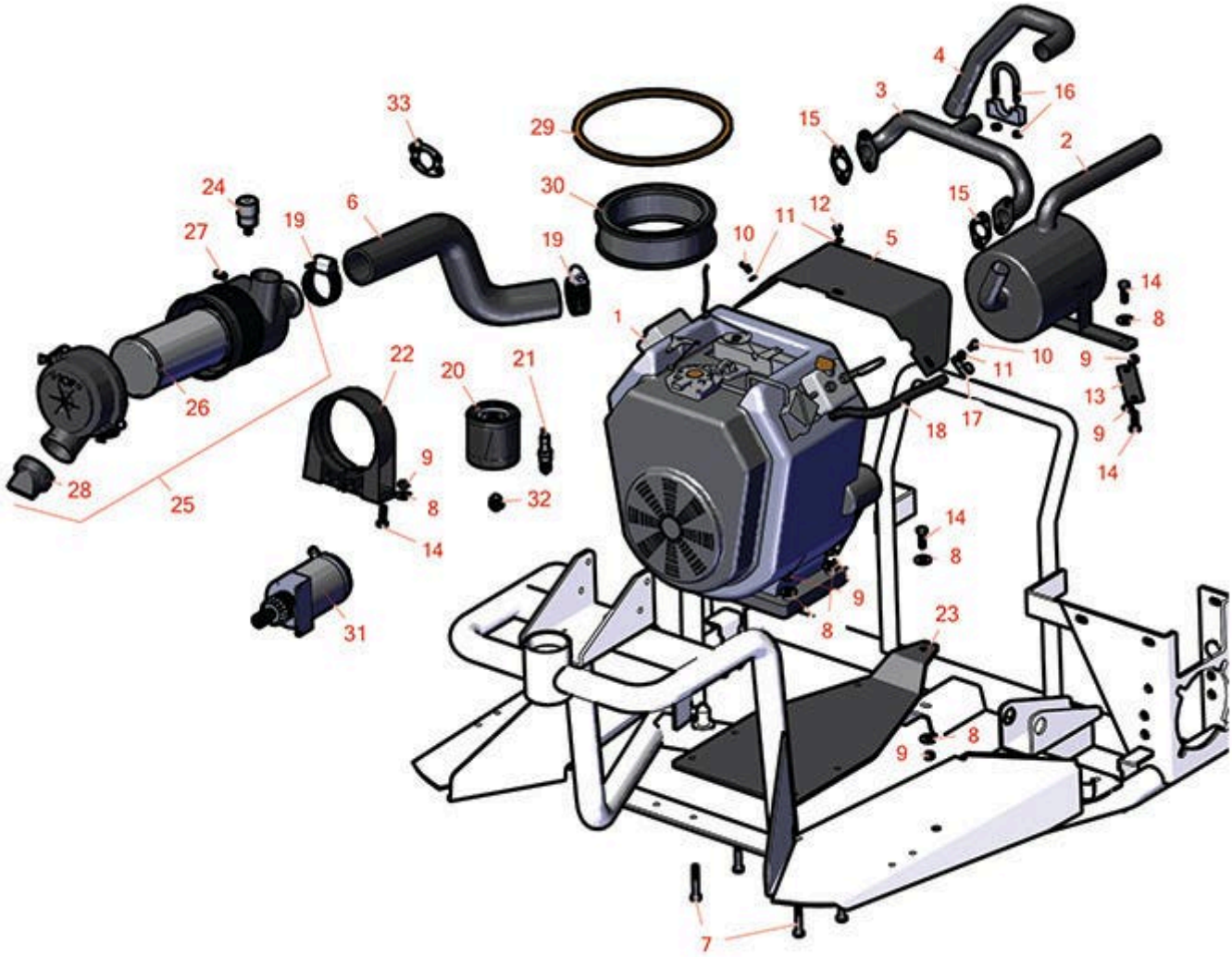

All original equipment manufacturers names and part numbers are used for identification purposes only, and we are in no way implying that our products are original equipment parts. Prices subject to change without notice.

Replaces Toro Sand Pro 2020 Parts

Traction Unit - Model 08884 & 08887

Engine

Item No	R&R Part No.	OEM Part No.	Description	Qty Req	Order Quantity
1	**RS3054470588G1**	117-2731, 117-2732, 120-3402, 98-0930	B-S Engine 16 Hp	1	
1	**RS3054470610G1**		B-S Engine 16 Hp	1	
2	**R95-0552**	95-0552	Muffler	1	
3	**R95-0550**	95-0550	Manifold - Exhaust	1	
4	**R95-0551**	95-0551	Tube-Exhaust	1	
5	**R105-8523**	105-8523, 88-8380, 95-5827, 95-5827-03	Shield - Muffler	1	
6	**R95-0582**	95-0582	Hose - Formed	1	
7	**R322-10**	20-30-AD, 24-7180, 322-10, 322-10 , 3223-6, 513347	Bolt - Hex HD 5/16-18 x 2	4	
8	**R453009**	01-166-0400, 24-10-BD, 24-9-AD, 32-9650, 3256-2, 3256-23, 3256-3, 3256-67, 3290-217, 3556-3, 4-2390, 7-0152	Washer - Flat 5/16 SAE	10	
9	**R3296-29**	1-804256, 3290-357, 3296-29, 915662P	Locknut - 5/16-18 ESNA	9	

All original equipment manufacturers names and part numbers are used for identification purposes only, and we are in no way implying that our products are original equipment parts. Prices subject to change without notice.

Replaces Toro Sand Pro 2020 Parts

Traction Unit - Model 08884 & 08887

Engine

Item No	R&R Part No.	OEM Part No.	Description	Qty Req	Order Quantity
10	**R48-7610**	33113-012, 48-7610	Bolt - Hex HD Nyloc M6 x 12	2	
11	**R3255-7**	3255-7, 76-5310	Washer - Lock 1/4 Ext Star Z	3	
12	**R33113-008**	33113-008	Bolt - Hex HD M6-1.0 x 8	1	
13	**R95-0557**	95-0557	Bracket-Muffler	1	
14	**R322-5**	01-178-0508, 20-26-AD, 20-26-AGD, 30-9000, 322-5, 513341, 519755, 908019P, N/A	Bolt - Hex HD 5/16-18 x 1	5	
15	**RS691613**	691613	B-S Gasket-Exhaust	2	
16	**R813688**	95-0586	Clamp - Muffler 1-1/8	2	
17	**R2412-73**	2412-73	Clamp - Rubber Coated	1	
18	**R109-0302**	109-0302	Hose - Fuel	1	
18	**R75-4705**	75-4705	Hose - Fuel	1	
19	**R2412-130**	2412-130, 2412-92	Clamp - Hose 1 5/16-2 1/2	2	
19	**RG132**	2412-130, 2412-92	Clamp - Hose 1.56-2.5 Box/10	2	
20	**RS492932S**	107-7817, 492932	B-S Filter-Oil	1	

Detail Description: Oil Filter. Smaller Version of 491056 (Ht. 2-1/4"). For Extended Life Series Version, Use 696854/5076D/4206:

All original equipment manufacturers names and part numbers are used for identification purposes only, and we are in no way implying that our products are original equipment parts. Prices subject to change without notice.

Replaces Toro Sand Pro 2020 Parts

Traction Unit - Model 08884 & 08887

Engine

Item No	R&R Part No.	OEM Part No.	Description	Qty Req	Order Quantity
20	**RRF10608**	114-3494, 491056, 52 050 02-S, 85-4930, NN10147	SilverGuard Oil Filter	1	
20	**R491056**	107-7817, 491056	Baldwin Oil Filter	1	
20	**RRF10653**		SilverGuard Oil Filter	1	
20	**RRF10602**	107-7817, 492932	SilverGuard Oil Filter	1	
21	**RN7938**	130-8380, 491055, 496018	NGK Spark Plug - BKR5E	1	
	Detail Description: Replaces Champion RC12YC:				
22	**R95-5806**	95-5806	Bracket-Mounting	1	
23	**R95-0556-03**	95-0556, 95-0556-03	Base-Engine	1	
24	**R93-9164**	93-9164	Indicator - Service - Air Filter	1	
25	**R95-5805**	95-5805	Air Filter Assy	1	
26	**R108-3811**	108-3811	Element - Air Cleaner	1	
26	**RS272490S**	272490, 92-0530	B-S Filter-Pre Cleaner	1	
	Detail Description: Pre-cleaner for 394019S & 394018S:				
27	**R285-17**	285-10, 285-17	Plug - 1/8 NPT	1	
28	**R87-9400**	104-0498, 87-9400	Valve - Vacuator	1	
29	**R85-8360**	85-8360	Gasket - Ring	1	
30	**R394018**	394018, 92-0527	Baldwin Air Filter - Gas Engine	1	

All original equipment manufacturers names and part numbers are used for identification purposes only, and we are in no way implying that our products are original equipment parts. Prices subject to change without notice.

Replaces Toro Sand Pro 2020 Parts

Traction Unit - Model 08884 & 08887

Engine

Item No	R&R Part No.	OEM Part No.	Description	Qty Req	Order Quantity
30	**RS394018S**	394018, 92-0527	B-S Filter-A/C Cartridge	1	
	Detail Description: Fits L-Head Twin Horizontal & V-Twin Vanguard,:				
30	**RRF10102**	394018, 92-0527	SilverGuard Air Filter	1	
31	**RS691564**	691564	B-S Motor-Starter	1	
32	**R2412-108**	2412-108, 97406	Clamp - Worm - 1/4 - Stainless	2	
33	**RS844931**	692081	B-S Gasket-Air Cleaner	1	

All original equipment manufacturers names and part numbers are used for identification purposes only, and we are in no way implying that our products are original equipment parts. Prices subject to change without notice.